autotaps®

WATER SAVING TECHNOLOGY IS OUR SPECIALTY

AUTOMATIC SENSOR TAPS MANUFACTURER

2011 v2.0

autotaps®

WATER SAVING TECHNOLOGY IS OUR SPECIALTY

INTRODUCTION

Autotaps Limited is a manufacturer and supplier of infrared automatic sensor taps. We offer wide range of sensor activated taps, automatic urinal flushers, automatic shower products, DIY sensor tap adaptors and accessories.

Autotaps products incorporate state-of-the-art technology and several heavy-duty commercial features, such as solid-cast brass outer shell, anti-rotational trim plates and flexible stainless steel supply hoses. All our products are CE Certified with 36-month Warranty. It features water conservation of around 0.5 gallons per minute (GPM) with vandal-resistant body structure.

Autotaps Limited have designed, and manufactured commercial solid brass taps, and we are today's leading supplier of electronic sensor taps.

We have the capability to supply domestic or commercial projects, and our products are suitable for healthcare centres, domestic/commercial applications, schools or universities, restaurants, and Government projects.

We have pledged our time on research and development by integrating the latest technology and design innovations using only top-quality materials to ensure total customer satisfaction and product integrity.

*Subject to terms

KEY COMPONENTS

Our automatic sensor taps combine four key components: Solenoid valve, infrared sensor, power source, and a tap housing/shell.

Solenoid valve

Transforming electrical energy into motion, the solenoid physically starts and stops the water flow. Autotaps products use "latching" solenoid valves. The solenoid valve is initially energized to start the water flow; the plunger is driven into the range of a permanent magnet which in turn holds the plunger in the "open" position. In order to return the plunger into its original "closed" position the solenoid is once again "pulsed" but this time by reversing polarity.

Infrared sensor component

When the sensor senses the presence of an object (i.e. user's hands) in front of the tap and sends a signal to the solenoid valve to initiate the flow of water. When the object is no longer present, the infrared unit sends an electronic signal to the solenoid valve again to terminate the flow of water usually after a few seconds.

Power source

Most of our Autotaps models have the possibility to be powered by regular AA batteries (Alkaline) or by mains via a 6V transformer. Batteries and transformers are included with most of our products.

Brass body

The body/shell delivers the water. Autotaps puts special emphasis in design and quality. Even if the tap is electronic it must be in tune with the style of every specific place. Autotaps produces electronic taps with different styles to match every decorative theme.

Autotaps offers extra cost savings by providing additional water conservation. Regular taps do not offer the possibility of shutting off automatically when water is no longer needed.

When a user turns a normal tap ON, it stays ON until it's turned OFF hence wastes water during this process of manual turning.

Autotaps has an advanced infrared 'ON - OFF' sensor technology function that stops the water when an object is not detected in its infrared zone. This ensures additional water conservation, prevents cross termination and offers extra cost savings by reducing maintenance costs.

AMA SERIES

Autotaps AMA Series Collection is elegant, contemporary and practical with stylish good looks. This collection boasts a strong and innovative 2-in-1 (Manual and automatic) design that works well in any surroundings.

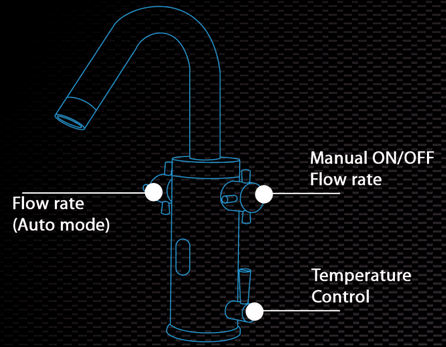

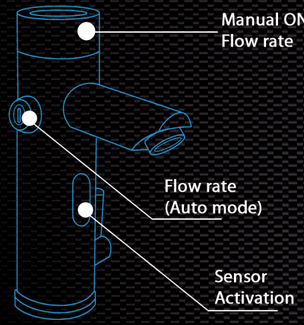

AMA Series models are manufactured to the highest standards, with solid brass outer shell and temperature control levers that ensures precise temperature adjustment control. All our sensor tap products are drip-free and resistant to the build up of limescale which affects performance.

The AMA Series sensor taps are the jewels of any bathroom and kitchen as they are finished in metallic chrome and can add a dramatic effect and value to any space.
The cost of AMA Series is similar to some conventional taps; however an electronic tap adds a lot of comfort and functionality and water conservation to the bathroom or kitchen.

Benefits

- Highly suitable for commercial or domestic application
- No more difficult to install than any standard tap
- 2-in-1 integrated design (manual and automatic)
- Automatic 'hands-free' infra red technology acivation (battery operated)
- Manual ON/OFF override water control system
- Temperature control handle allows temperature adjustments before and during use
- Solid brass outer-shell construction
- Operating components (i.e. solenoid valve) built inside the tap's body
- 2-Pipeline design with double water supply feeds

autotaps®
WATER SAVING TECHNOLOGY IS OUR SPECIALTY

AMA-5201
DC

AMA-5201T
DC

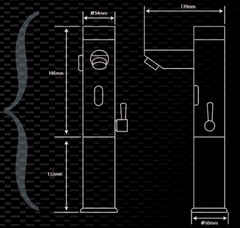

AMA-5206
DC

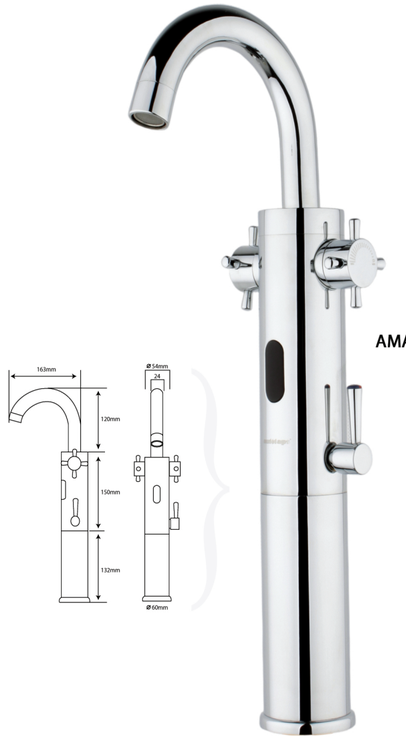

AMA-5206T
DC

AMA-5205
DC

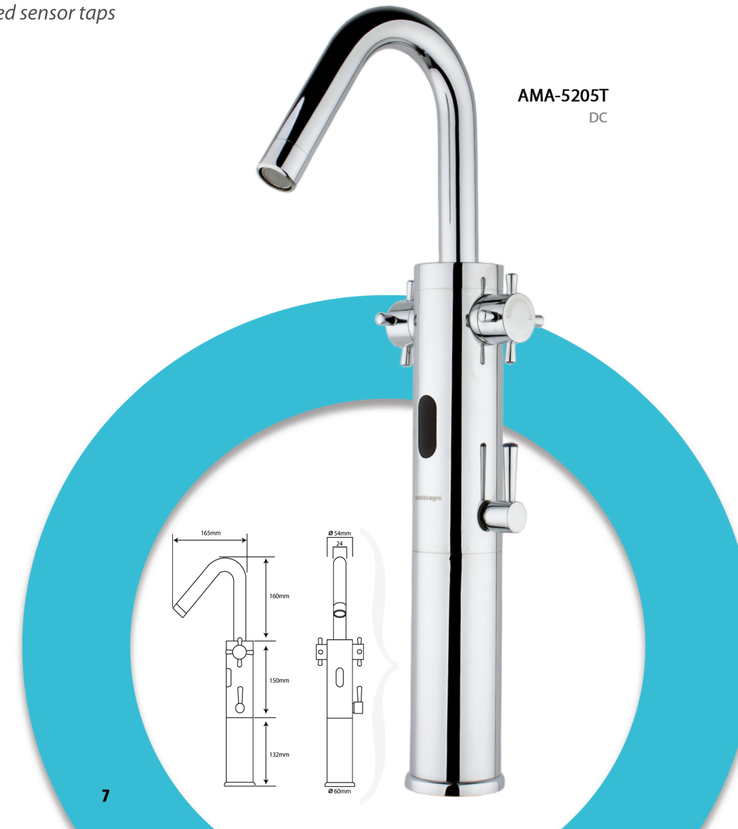

AMA-5205T
DC

AMA-5207
DC

ATO-0038
AC/DC

ATO-0039
AC/DC

autotaps
WATER SAVING TECHNOLOGY IS OUR SPECIALTY

Autotaps provides a very stable technology and accurate water flow over time, managed electronically.

autotaps
WATER SAVING TECHNOLOGY IS OUR SPECIALTY

ATX-0049
AC/DC

*With integrated spout sensor

ATX-0049S
AC/DC

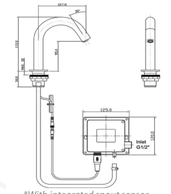

*With integrated spout sensor

ATX-8205
AC/DC

ATX-0049H
AC/DC

*With integrated spout sensor

ATX-8204
AC/DC

*With integrated spout sensor

ATX-0015
AC/DC

ATX-0702
AC/DC

ATX-0031
DC

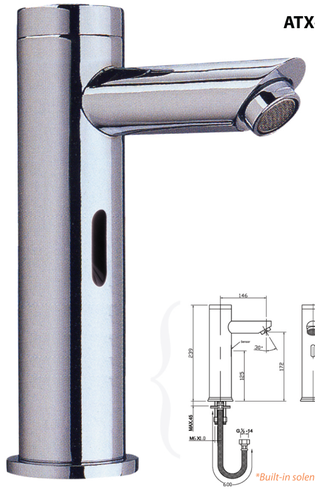

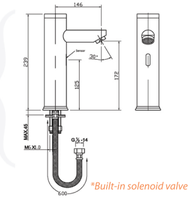

*Built-in solenoid valve

autotaps®
WATER SAVING TECHNOLOGY IS OUR SPECIALTY

Ralph O'Wallaby Designer Sensor tap

Supreme Elegance

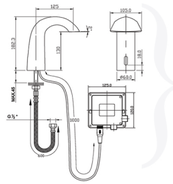

ROS-0027
AC/DC

Ralph O'Wallaby

ROS-8209
AC/DC

ROS Gold
-24ct-
Ultimate Luxury

ATS-0019
AC/DC

ATS-0043
AC/DC

*With integrated spout sensor

ATS-0059
AC/DC

ATS-1026
AC/DC

ATT-1103
DC

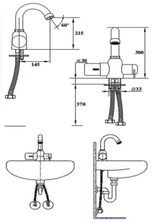

*Built-in solenoid valve

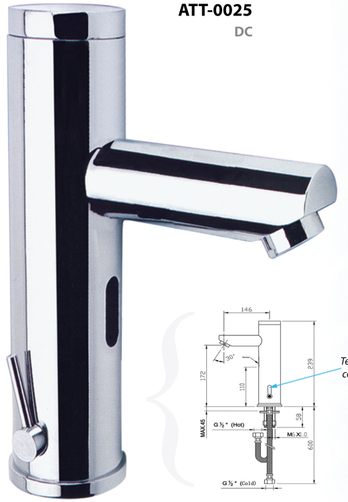

ATT-0025
DC

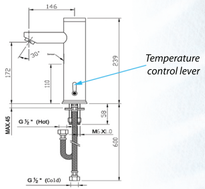

*Built-in solenoid valve

*The temperature is not thermostatically controlled- There's no thermostat built-in

*Built-in solenoid valve

ATT-1101
DC

*Built-in solenoid valve

ATT-1102
DC

*The temperature is not thermostatically controlled- There's no thermostat built-in

ATW-0048
AC/DC

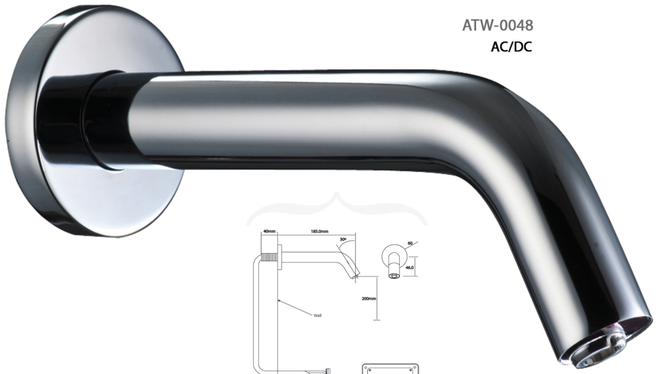

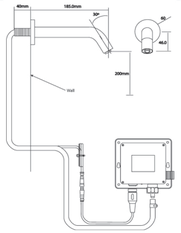

*With integrated spout sensor

ATW-8304
AC/DC

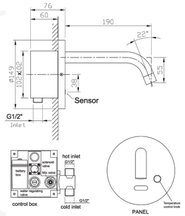

*With temperature control (Non-thermostat)

ATW-0512
AC/DC

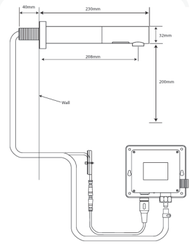

ATW-1288
AC/DC

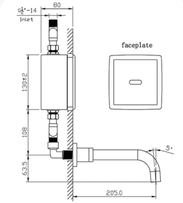

ATS-Series Sustainable infrared sensor tap

ATW-Series Wall-mounted infrared sensor taps

Front-mounted sensor activation

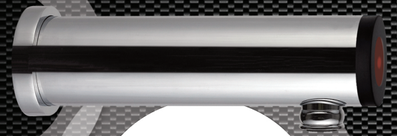

ATW-8506
DC

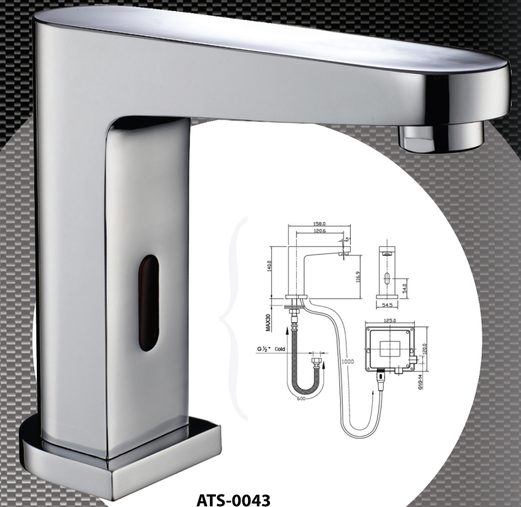

ATS-0043
AC/DC

ATU-Series Automatic urinal flushers

ATU-C032
AC/DC

ATU-C033
DC

ATU-C016
DC

ATU-R033
DC

ATU-P025
AC/DC

ATU-R101
DC

Sensor shower kit only

ATSH-2062

**The sensor kit is compatible with any existing installation or other shower heads*

Sensor shower kit only

ATSH-2063

autotaps
WATER SAVING TECHNOLOGY IS OUR SPECIALTY

Our wide range of sensor products include electronic wall-mounted taps, electronic deck-mounted taps, electronic flushing valves for urinals and toilets, electronic shower controls, vandal proof sensor taps and varieties of electronic components.

All our products are designed for both new construction and renovation projects.

We have pledged our time on research and development by integrating the latest technology and design innovations using only top-quality materials to ensure total customer satisfaction and product integrity.

Our sensor products are designed for high usage and stability. Autotaps products are suitable for airports, shopping centres, domestic applications, healthcare centres & hospitals, offices, stadiums, prisons, public toilets, schools and restaurants.

As the current electronic tap technology is entering the home front, many of our product lines are specifically designed for residential use.

Autotaps Accessories

ATV/ABV Series Thermostatic and manual mixer valves

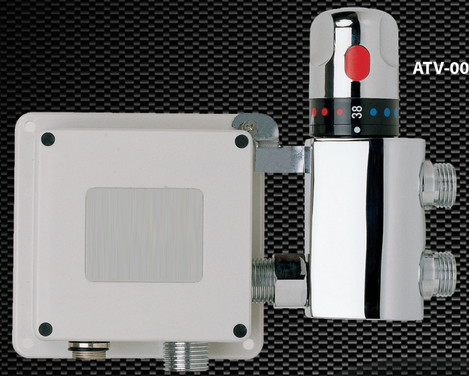

ATV-0076
-automatic

ABV-0012
- manual

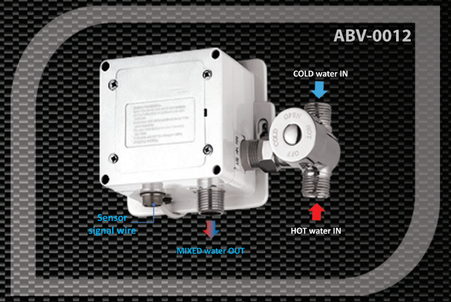

*Control box sold separately

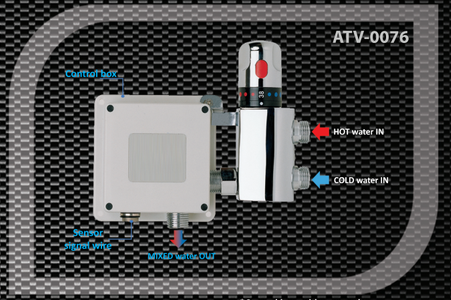

*Control box sold separately

Temperature Control

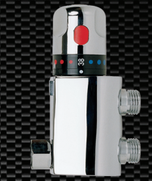

Pre-mix water supply

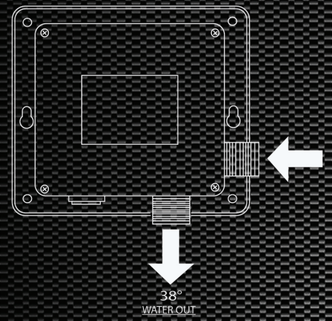

With pre-mix water supply, a safe water temperature is fed directly to the control box. Whatever water temperature is fed to the box, the same temperature is what comes out of the tap.

ABV-0012: Manual Blending Valve

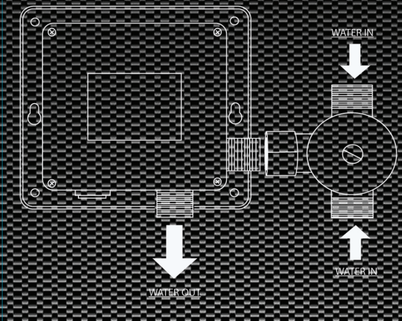

A manual blending valve require the user to manually twist the knob left or right to adjust the temperature manually.

ATV-0076: Thermostatic Mixer Valve

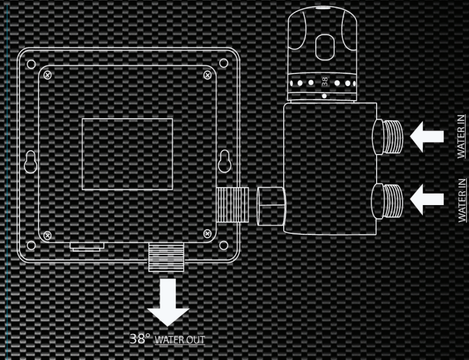

A thermostatic valve automatically regulates the temperature. This device maintains a constant temperature i.e. at 38° and it will automatically adjust its temperature accordingly if the temperature of water feeds fluctuates.

Autotaps Sensor Kit: ASK-100

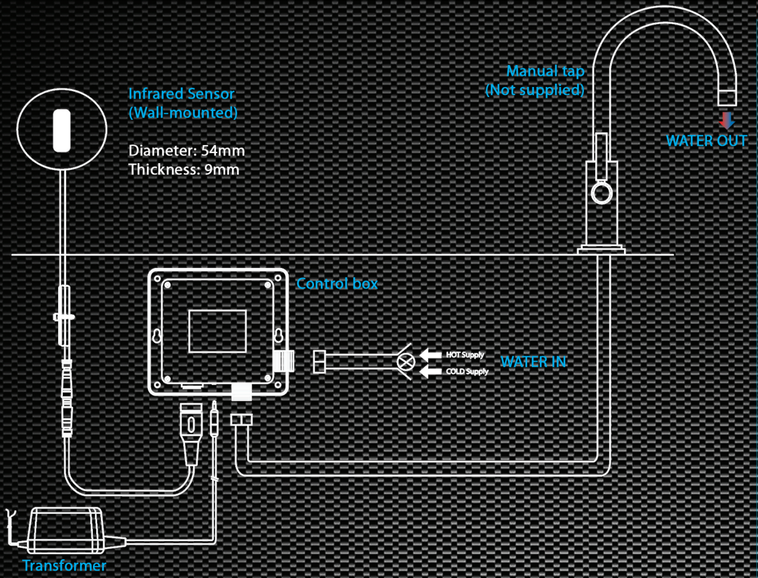

Autotaps DIY Sensor Kit (ASK-100)

With Autotaps sensor kit, an existing manual or conventional tap can be converted into an automated 'no touch' activation system.

Benefits:

Easy to to implement
Affordable
Save water, save energy
Up to 70% water conservtion
Portable- Small wall-mountable infra red activation component
Flexibility- You can choose any manual tap of your choice/design
Compatible with most conventional taps

Features:

Chrome-plated finish infra red component housing
Sensing distance/range adjustable
Easy-mount sensor ring
AC/DC Powered
6v Transformer supplied
Pressure: 0.75-6 Bar

With ASK-100 sensor kit, you get the following parts:

1x Circular Infrared Sensor (wall-mounted)
1x Control box
4x Alkaline batteries
1x. Transformer

Autotaps Limited
Unit 14f, 5th Floor, Piano House
9 Brighton Terrace
London
SW9 8DJ
United Kingdom

URL: www.autotaps.com Email: sales@autotaps.com, info@autotaps.com
Tel: 00 (44) 203 086 9820, 00 (44) 208 133 7680, 00 (44) 207 274 8899
Fax: 00 (44) 208 711 5674